© – TE Connectivity. All Rights Reserved.

REVISIONS					
P	LTR	DESCRIPTION	DATE	DWN	APVD
	H2	REVISED PER ECN-22-156403	03JUN2022	RK	CSD

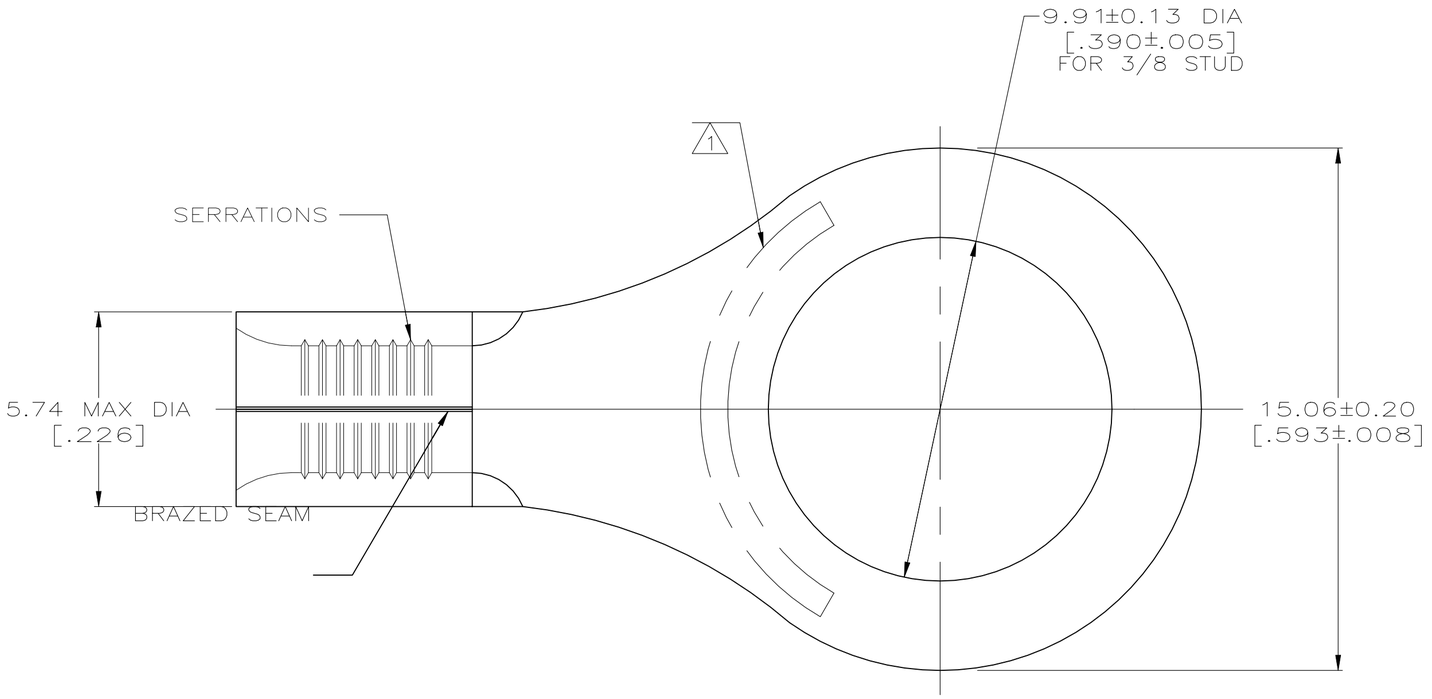

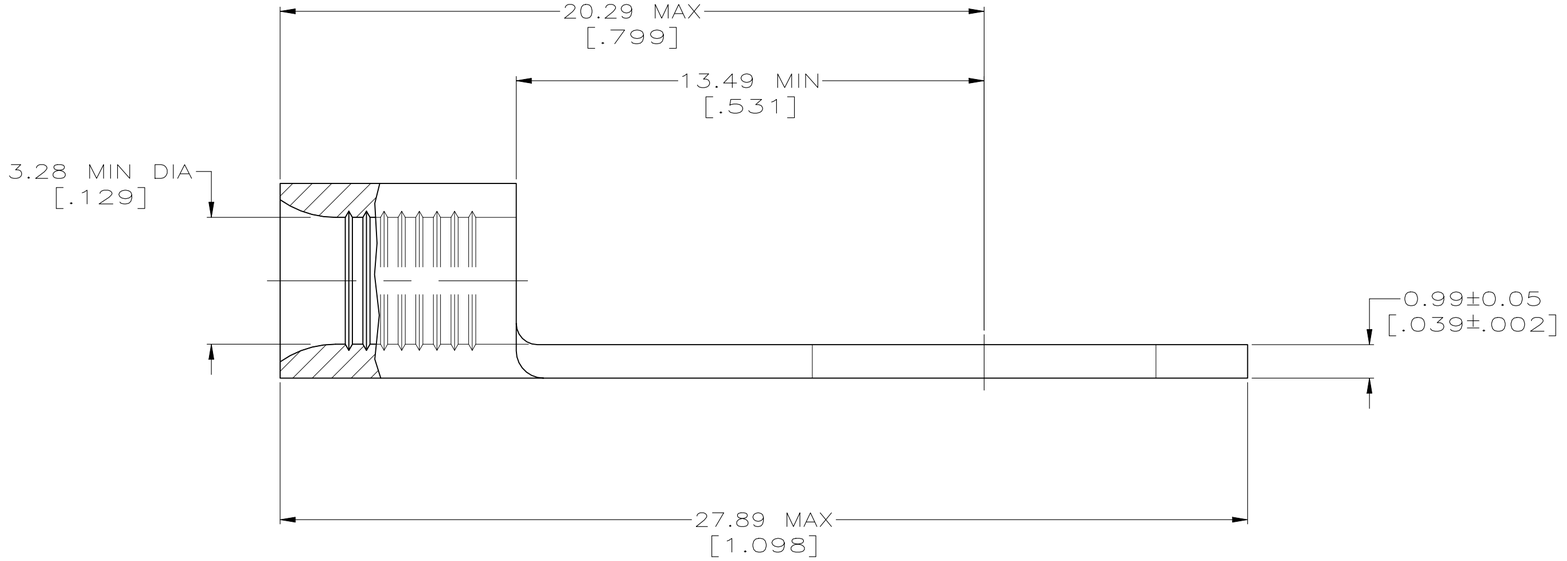

METRIC

DIMENSIONS LISTED IN mm [INCHES]

AMP WIRE RANGE	E13288 Listed
12–10 AWG SOLID OR STRANDED	12–10 AWG STRANDED

LR7189 Certified	MILITARY P/N AND CLASS
12–10 AWG SOLID OR STRANDED	MS20659–128 CLASS 1 P/N 33220 ONLY

1 STAMP AMP 12–10* APPROX AS SHOWN

QTY	PACKAGE TYPE	PART NO
50	LOOSE PIECE, SPCL BOX	8–33220–5
50	LOOSE PIECE, BOX	8–33220–2
1000	TAPE MOUNTED	1–33220–2
–	–	33220

AMP INCORPORATED CUSTOMER SERVICE SYSTEMS

FOR ADDITIONAL PRODUCT INFORMATION OR COPIES OF DRAWINGS AND TECHNICAL DOCUMENTS	PRODUCT INFORMATION CENTER 1–800–522–6752
FOR APPLICATION TOOLING INFORMATION	TOOLING ASSISTANCE CENTER 1–800–722–1111
FOR ORDER ENTRY	1–800–526–5142

MAX RECOMMENDED OPERATING TEMPERATURE: 170° C MAX

VOLTAGE RATING: NOT APPLICABLE

WIRE CROSS SECTIONAL AREA RANGE: 2.62–6.64mm² [5,180–13,100] CIR MILS SOLID OR STRANDED

THIS DRAWING IS A CONTROLLED DOCUMENT FOR AMP INCORPORATED. IT IS SUBJECT TO CHANGE AND THE CONTROLLING ENGINEERING ORGANIZATION SHOULD BE CONTACTED FOR THE LATEST REVISION.

THIS DRAWING IS A CONTROLLED DOCUMENT.

DIMENSIONS: mm[INCHES]

TOLERANCES UNLESS OTHERWISE SPECIFIED:
0 PLC ± –
1 PLC ± –
2 PLC ± –
3 PLC ± –
4 PLC ± –
ANGLES ± –

MATERIAL: COPPER PER ASTM B–152 ANNEALED

FINISH: TIN PLATE 0.00254[.000100] MIN THK PER MIL–T–10727

DWN TA BRINKMAN 3–17–93
CHK DA PATTERSON 3–17–93
APVD DE MILLER 3–17–93
PRODUCT SPEC –
APPLICATION SPEC –
WEIGHT –

TE Connectivity

NAME: TERMINAL, RING TONGUE, SOLISTRAND

SIZE	CAGE CODE	DRAWING NO	RESTRICTED TO
A2	00779	C–33220	–

CUSTOMER DRAWING | SCALE 8:1 | SHEET 1 OF 1 | REV H2

33220

1471–9 (1/15)