© – TE Connectivity. All Rights Reserved.

REVISIONS					
P	LTR	DESCRIPTION	DATE	DWN	APVD
	C4	REVISED PER ECN-22-156403	06JUN2022	RK	CSD

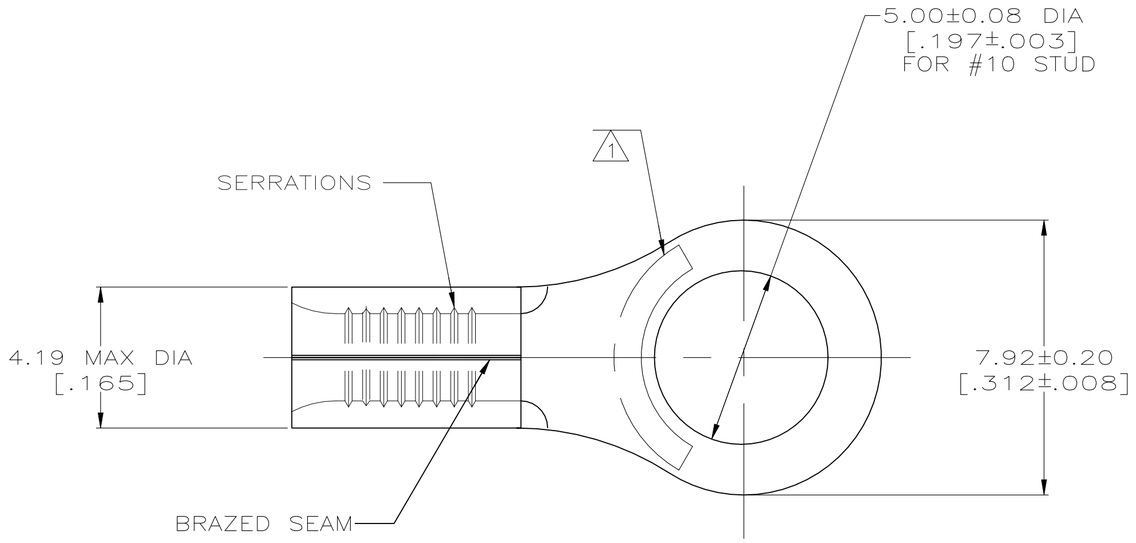

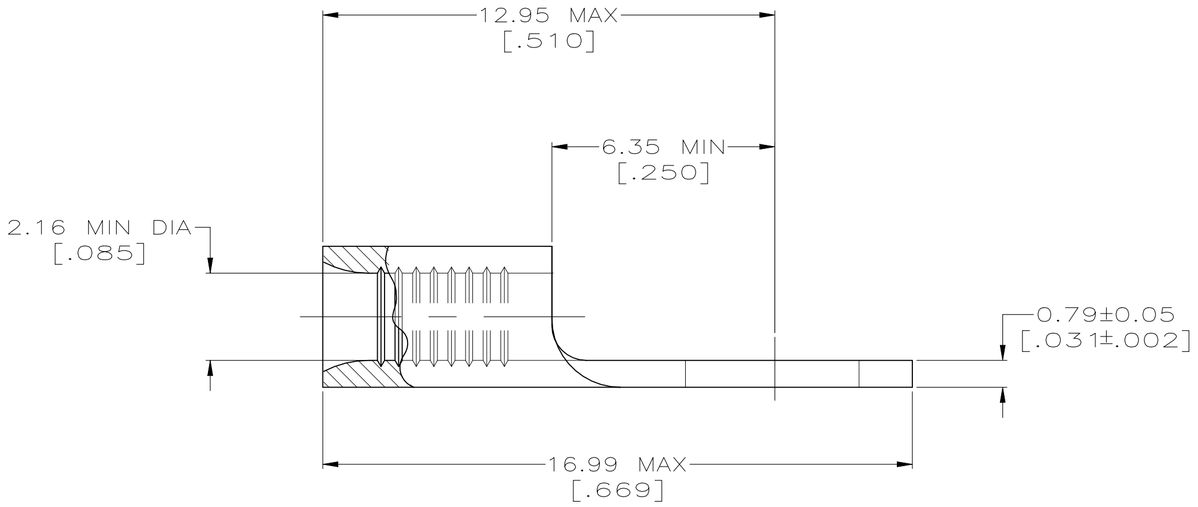

AMP WIRE RANGE	Listed FILE E13288	LR7189 Certified
16–14 AWG SOLID OR STRANDED	16–14 AWG SOLID OR STRANDED	16–14 AWG SOLID OR STRANDED

1. STAMP AMP 16–14* APPROX AS SHOWN
2. COPPER PER ASTM B–152, ANNEALED
3. TIN PLATE 0.00254 [.000100] MIN THK PER ASTM B–545
4. MEETS M7928/7–8, CLASS 1
5. NOTE DELETED
6. RECOMMENDED OPERATING TEM IS 170°C MAX
7. WIRE CROSS SECTIONAL AREA RANGE IS 1.04–2,62mm2 [2,050–5,180] CMA

320093

QUANTITY	PACKAGING TYPE	PART NO.
5000	ON TAPE	2–320093–1
----	LOOSE PIECE	4 320093

THIS DRAWING IS A CONTROLLED DOCUMENT.

DIMENSIONS: mm[INCHES]

TOLERANCES UNLESS OTHERWISE SPECIFIED:
0 PLC ± –
1 PLC ± –
2 PLC ± –
3 PLC ± –
4 PLC ± –
ANGLES ± –

MATERIAL 2

FINISH 3

DWN	TA BRINKMAN	3–17–93
CHK	DA PATTERSON	3–17–93
APVD	JL MECKLEY	3–17–93
PRODUCT SPEC	–	
APPLICATION SPEC	–	
WEIGHT	–	

TE Connectivity

NAME: TERMINAL, RING TONGUE, SOLISTRAND

SIZE	CAGE CODE	DRAWING NO	RESTRICTED TO
A2	00779	C-320093	–

CUSTOMER DRAWING | SCALE 8:1 | SHEET 1 OF 1 | REV C4